WARNING

DISCONNECT POWER BEFORE RELAMPING OR WIRING THE FIXTURE
READ ALL INSTRUCTIONS COMPLETELY BEFORE STARTING INSTALLATION.

CAUTION

- **TO AVOID THE RISK OF FIRE OR SHOCK, FIXTURE MUST BE INSTALLED IN COMPLIANCE WITH ALL APPLICABLE NATIONAL AND LOCAL ELECTRICAL/BUILDING CODES.**
- **INSTALLATION AND MAINTENANCE OF THIS UNIT REQUIRES AN ELECTRICIAN OR CERTIFIED FACTORY TRAINED TECHNICIAN.**
- **If an existing fixture is being replaced, remove it and note to which of the wires in the outlet box the fixture was attached. DO NOT SEPARATE ANY OTHER WIRES THAT MAY BE IN THE BOX. DO NOT DAMAGE THE INSULATION OF OLDER WIRING. In regular circumstances the BLACK wire will be the "Hot" lead and the WHITE wire will be the "Neutral" or "Common" lead. The GREEN or BARE COPPER wire is the "Ground". In older buildings it is always good practice to reconfirm the polarity of the wiring**.

NOTICE

- **The important safeguards and instructions outlined on this sheet cannot cover all possible conditions and situations that may occur. it must be understood that common sense, caution and care factors that cannot be built into any product. Caution and care must be supplied by the person(s) installing, operating and caring of this lighting fixture.**
- **This fixture is designed to be mounted on a correctly installed standard round or octagon box or a through wiring box with a plaster frame. The box must be securely mounted to the structure of the building. The crossbar and hardware supplied should be used. directly mounting the fixture to the outlet box may make it impossible to correctly align the fixture.**
- **This fixture is supplied with with a 4-pcs. stem. There is one 6" section, two 12" section and one 18" section. This feature allows the fixture to be mounted with a stem up to 48" in length in 6" increments (See Figure-3).**
- **This fixture is supplied with a swivel. By rotating the canopy the fixture may be mounted to angled ceiling.**

FIXTURE PREPARATION

1. Remove the fixture and parts bag(s) from the carton.

> **NOTICE:**
> **Before discarding the carton,**
> **double check to make certain that all parts are found**.

2. Thread the stem connector onto the coupling.
3. Determine the overall desired length of the fixture. Assemble the adjustable stems one at a time onto the fixture leads. Tape the end of the leads to a stiff wire (coat hanger) to aid in pulling them through the stems. Place the canopy with the ss accent onto the stem. Assemble the fixture stem and swivel. Place the swivel blocker over the nipple of the canopy and thread the hex nuts onto them.

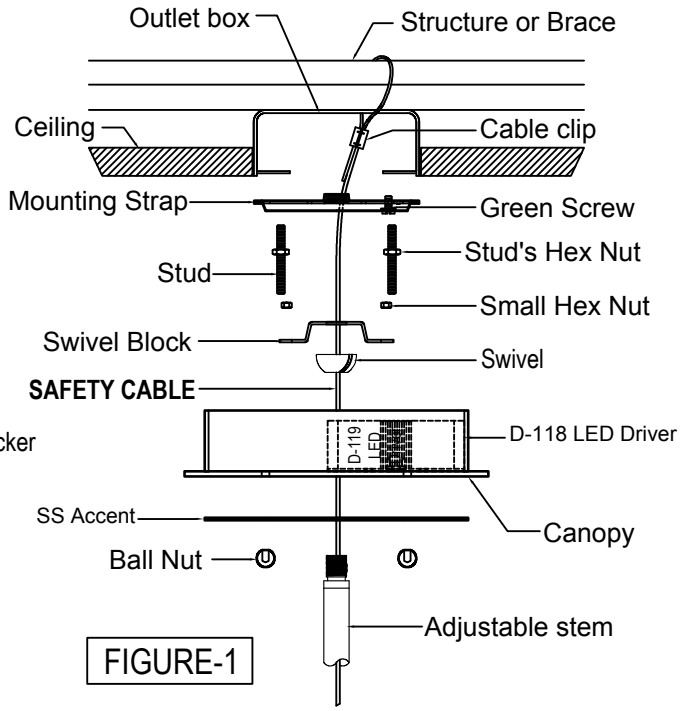

FIGURE-1

FIXTURE INSTALLATION

1. Place the led driver inside the canopy. Fasten the black wire from DC output (black and red wire combination) of the led driver to the black wire coming from the fixture. Fasten the wires with the approved fastener. Starting about 1" below the fastener, tightly wrap the connection with electrical tape so that the connection seals the end of the fastener. (See figure 2)

2. Connect the red wire from the fixture together to the red wire from the led driver. Fasten the wires as in step 1. (See figure 2) Note: LED light should be received assembled as seen in Replacement LED Instruction.

3. Attach the safety cable together with the mounting strap. Safety cable should be attached to the building structure or brace, while the mounting strap should be attached to the junction box. (See figure 1) (The green screw should face the floor) Thread the studs into the mounting strap at the spacing that matches the mounting holes in the canopy. Adjust the screw so they extend 3/16" beyond the canopy.

NOTICE:
THIS LUMINAIRE MUST BE MOUNTED OR SUPPORTED INDEPENDENTLY OF AN OUTLET BOX.

WARNING
REFER TO THE ILLUSTRATION FOR CORRECT AND SAFE INSTALLATION OF SAFETY CABLE. FAILURE TO FOLLOW THIS INSTRUCTION COULD RESULT HARM/DAMAGE TO THE FIXTURE, PROPERTY AND/OR PERSON(S)!

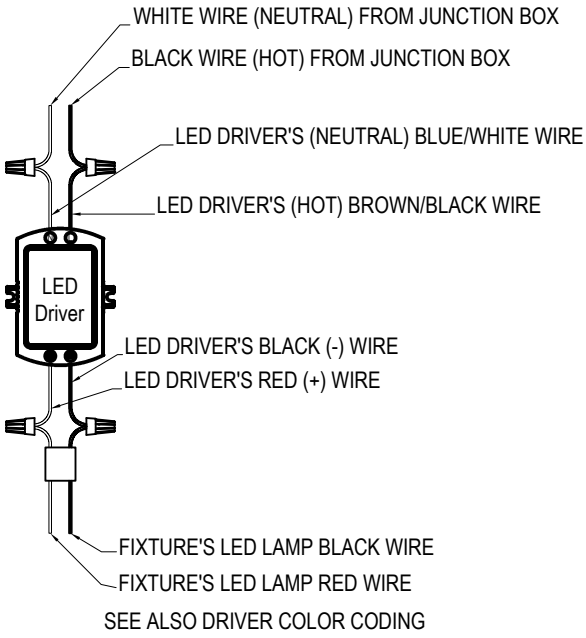

LED LAMP TO LED DRIVER WIRE CONNECTION DETAILS

FIGURE-2

4. Cut off the excess ground and fixture wire 6" beyond the canopy. Strip 1/2" of insulation from the ends of the wire. Twist the wire stands together.

5. Fasten the ground wire to the green or bare copper wire in the junction box or the green screw on the mounting strap.

WARNING
Never fasten the ground wire to the black or "hot" wire! Failure to follow this instruction could result in serious injury or death!

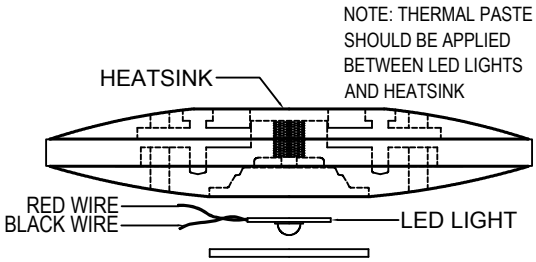

Replacement LED Instruction

6. Fasten the white from the led driver to the white wire in the junction box. Fasten the wires together with an approved fastener (wire nut). Starting about 1" below the fastener, tightly wrap the connection with electrical tape so that the connections seals the end of the fastener. (See figure 2)

WARNING
Make sure that there is no exposed wire or strands that could cause serious injury or death!

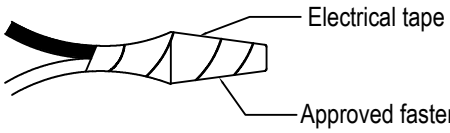

7. Connect the black wire of the led driver to the black wire in the outlet box. Fasten the joined wires as in step 6.

8. Using the end balls, loosely fasten the fixture to the mounting plate. Rotate and align the canopy as necessary. Tighten the end balls.

9. Restore power to circuit at breaker or fuse box.

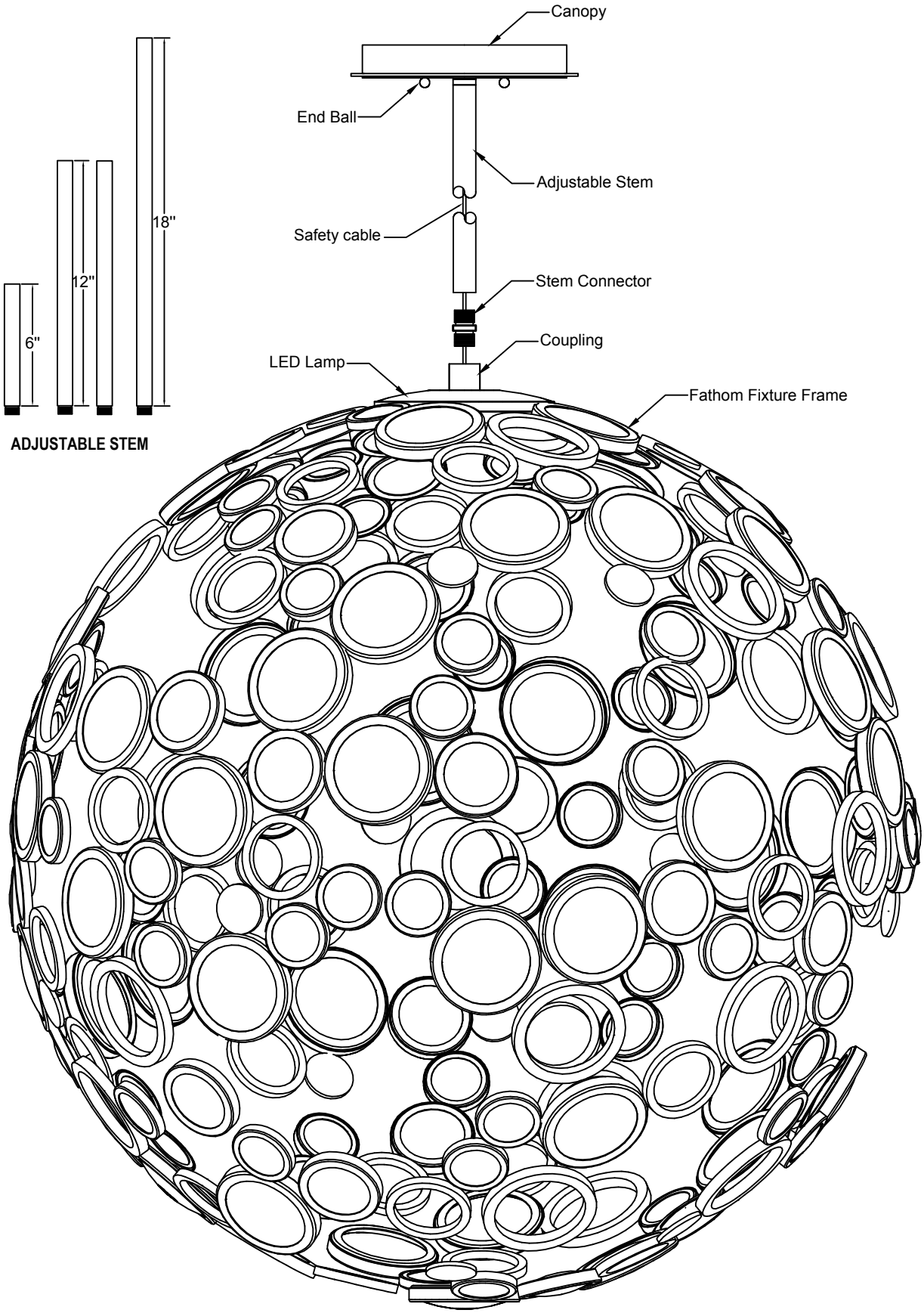
Canopy
End Ball
Adjustable Stem
Safety cable
Stem Connector
Coupling
LED Lamp
Fathom Fixture Frame
18"
12"
6"
ADJUSTABLE STEM

FIGURE-3